TNC Right Angle Jack, PCB Mount Type (IP67)

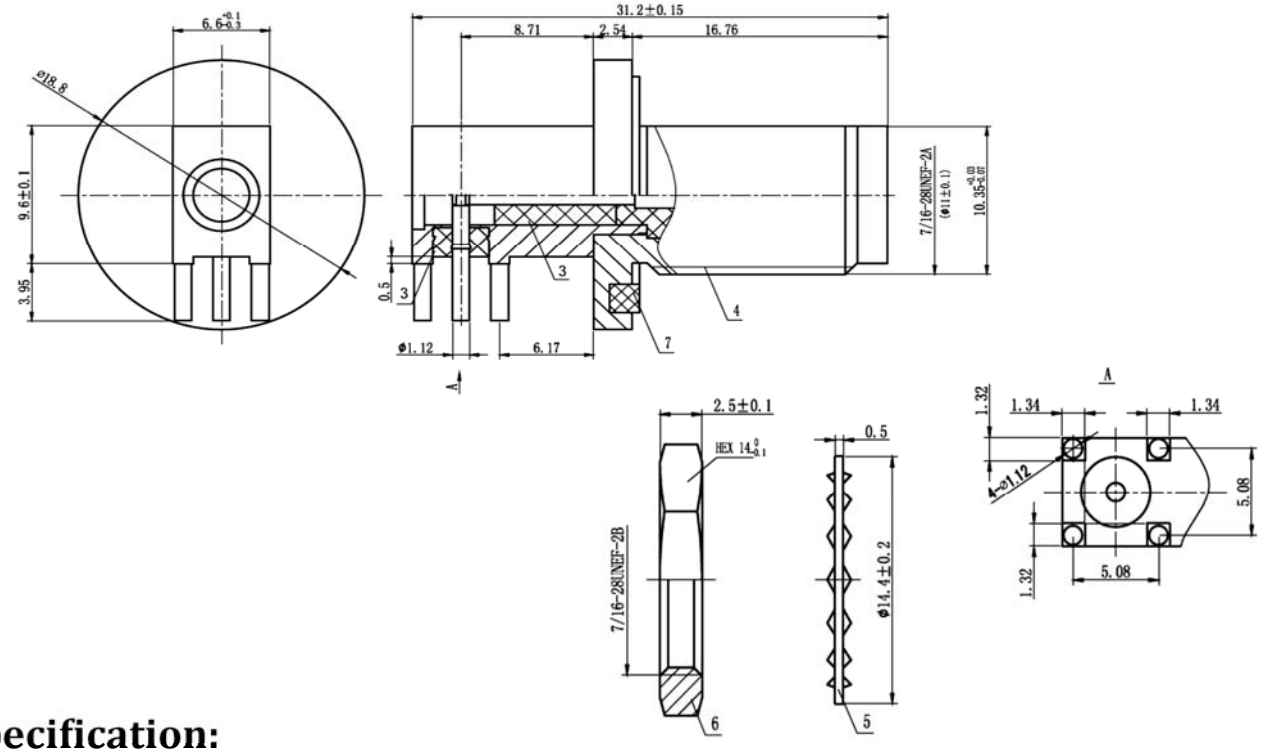

Specification:

1. Impedance: 50Ω
2. VSWR: <1.25 (DC~3GHz)
3. RoHS Compliant
4. Working Temperature: -40 to +85℃
5. Salt Spray: 48 hours
6. Insertion Loss: <0.25

No.	Description	Material	Plating	QTY
1	Center PIN	QSn6. 5-0.1	Au0.01	1
2	PCBA PIN	HPb59-1	Au0.01	1
3	Insulator	PTFE	-	1
4	Body	HPb59-1	Au0.01	1
5	Lock washer	QSn6. 5-0.1	Ni3	1
6	Hex Nut	HPb59-1	Ni3	1
7	O-ring	EPDM	-	1

Notes:

1- The overall contour may be slightly changed per terminating with different cable and we reserve right to change it without notice.

2- Any changes for interface dimensions are strictly prohibited.

3- The Material and plating are in various options per customer's request.

4- A complete information for connectors is available upon request.

Tolerances	Scale	Abbr.	Rev.	Part Number:	
.X ±0.2 .XX ±0.1 .XXX ±0.05	NTS	ST	B	F142 - 430	
PAGE 1 of 1	All Dimensions in mm (Unless Otherwise Specified)			Date 2021/08/01	RoHS 2